# Instruction Sheet
# Models LT34, LT342S, LT45, and LT45C

LUXOR | H.WILSON

Customer Service Dept.
2245 Delany Rd
Waukegan, IL 60087
Ph: 847/244-1800 • 800/323-4656
Fax: 847/244-1818 • 800/327-1698

**PARTS LIST**
1- Top shelf w/handle
1 - Set long legs
1 - Set short legs
1 - Middle shelf w/8 leg posts
1 - Bottom shelf with caster sockets
1 - Set 4” casters (2 w/brake)
1 - Grommet pass through
4 - Sure grip pads
1 - Pullout shelf
1 - Set of runners
1 - Cabinet pack

**Tools Required:**
1 - Rubber mallet
1 - Slotted screwdriver

## Step 1
Turn bottom shelf upside down and tap casters into caster sockets. Turn bottom shelf over onto casters.

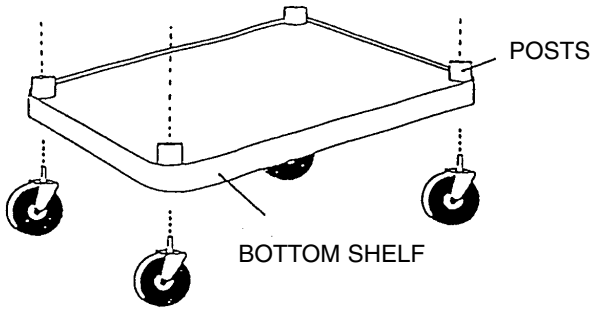


## Step 2
Next insert longer legs over shelf leg post.
Position middle shelf over the four long legs.
Using rubber mallet insert shelf leg post onto legs.
Insert shorter legs onto middle shelf leg post.

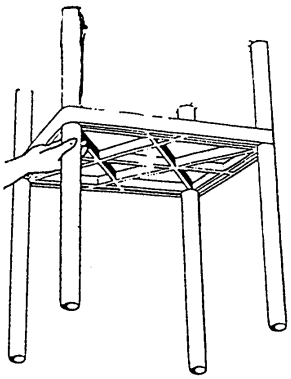

## Step 3
Insert keyboard runners onto legs. (See diagram)
Thread allen set screws into runners.
Using allen wrench, tighten set screws until runners are secured. Take shelf runner adapter brackets and secure to pullout shelf using 1/2” sheet metal screws. NOTE: Adapter brackets have a hole on end, this is the front of the bracket. That hole must be on the side of the shelf with the rounded edge.
Next, take shelf and slip rear of adapter bracket under tab on runner. Front of adapter has hole that goes over black locking tongue. Push down until it snaps into place.

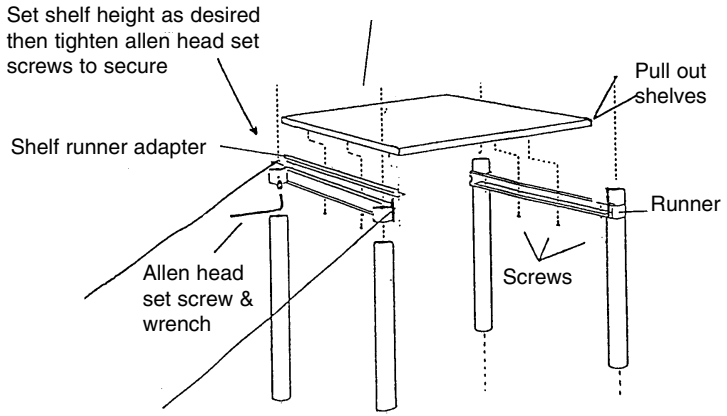

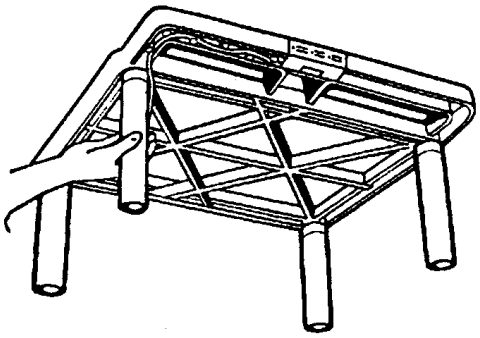
## Step 4
Now position top shelf leg posts over the four legs.
Using rubber mallet insert leg post onto legs.